R-KEX-I HIGH-PERFORMACE EPOXY RESIN THREADED RODS

High performance pure epoxy resin approved for cracked and non-cracked concrete. Available in Asia-Pacific region.

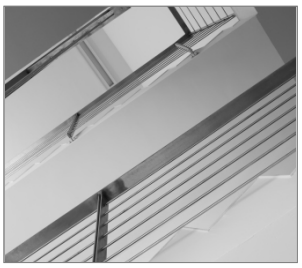

Approvals and Reports

- ETA-18/0994

Product information

Features and benefits

- High-performance epoxy resin for concrete.
- Approved for use with threaded rods for use in non-cracked concrete (EAD 330499-00-0601).
- Suitable for use in dry and wet substrates including flooded holes (use category I1 & I2).
- Installation direction D3 (downward and horizontal and upwards installation).
- Very high chemical resistance – suitable for applications exposed to influence of various agents (industrial or marine environment).
- Extended working time ensures easy installation of metal components (up to 50 min. in 20°C).
- Working with Dustlessdrill - drlling and hole cleaning in one step.

Applications

- Safety barriers
- Formwork support systems
- Structural steelwork
- Street lamps
- Curtain walling
- Racking systems
- Balustrading
- Barriers
- Cladding restraints
- Masonry support
- Heavy machinery
- Platforms

Base materials

Approved for use in:

- Non-cracked concrete C20/25-C50/60
- Cracked concrete C20/25-C50/60

Installation guide

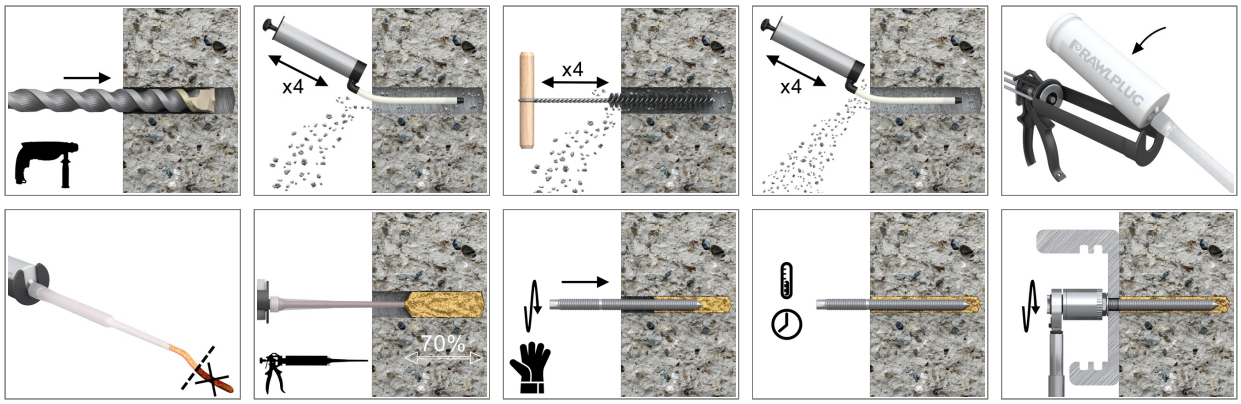

Product information

1. Drill hole to the required diameter and depth for stud size being used.
2. Clean the hole thoroughly with brush and hand pump at least four times before installation.
3. Insert cartridge into gun and attach nozzle.
4. Dispense to waste until even colour is obtained.
5. Insert the mixing nozzle to the far end of the hole and inject resin, slowly withdrawing the nozzle as the hole is filled to 70% of its depth.
6. Immediately insert the stud, slowly and with slight twisting motion. Remove any excess resin around the hole before it sets and leave it undisturbed until the curing time elapses.
7. Attach fixture and tighten the nut to the required torque.

Product Code	Resin	Description / Resin Type	Volume [ml]
R-KEX-I-600	R-KEX I	Epoxy Resin	600

R-STUDS

Size	Product Code			Anchor		Fixture		
	Steel class 5.8	Steel class 8.8	Steel grade A4	Diameter	Length	Hole diameter	Max. thickness t_{fix} for:	
				d	L	d_f	$h_{nom,min}$	$h_{nom,12d}$
				[mm]	[mm]	[mm]	[mm]	[mm]
M8	R-STUDS-08110	R-STUDS-08110-88	R-STUDS-08110-A4	8	110	9	40	4
	R-STUDS-08160	-	R-STUDS-08160-A4	8	160	9	90	54
M10	R-STUDS-10130	R-STUDS-10130-88	R-STUDS-10130-A4	10	130	12	48	-
	R-STUDS-10170	-	-	10	170	12	88	38
	R-STUDS-10190	-	-	10	190	12	108	58
M12	R-STUDS-12160	R-STUDS-12160-88	R-STUDS-12160-A4	12	160	14	65	1
	R-STUDS-12190	-	R-STUDS-12190-A4	12	190	14	95	31
	R-STUDS-12220	-	-	12	220	14	145	61
	R-STUDS-12260	-	-	12	260	14	165	101
	R-STUDS-12300	R-STUDS-12300-88	R-STUDS-12300-A4	12	300	14	205	141
M16	R-STUDS-16190	R-STUDS-16190-88	R-STUDS-16190-A4	16	190	18	71	-
	R-STUDS-16220	R-STUDS-16220-88	-	16	220	18	101	9
	R-STUDS-16260	-	-	16	260	18	141	49
	R-STUDS-16300	-	-	16	300	18	181	89
	R-STUDS-16380	-	-	16	380	18	261	169
M20	R-STUDS-20260	R-STUDS-20260-88	R-STUDS-20260-A4	20	260	22	117	-
	R-STUDS-20300	R-STUDS-20300-88	-	20	300	22	157	37
	R-STUDS-20350	-	-	20	350	22	207	87
	R-STUDS-20220-HDG	R-STUDS-20220-88	-	20	220	22	77	-
	R-STUDS-20270-HDG	-	-	20	270	22	-	-
M24	R-STUDS-24300	R-STUDS-24300-88	R-STUDS-24300-A4	24	300	26	132	-
M30	R-STUDS-30380	R-STUDS-30380-88	-	30	380	32	181	-

Installation data

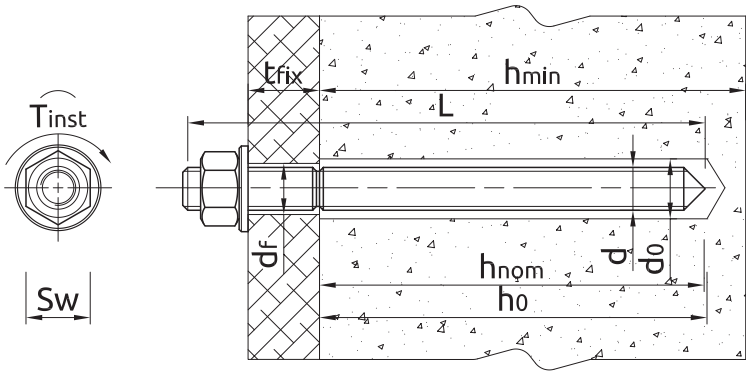

R-STUDS

Size			M8	M10	M12	M16	M20	M24	M30
Thread diameter	d	[mm]	8	10	12	16	20	24	30
Hole diameter in substrate	d_0	[mm]	10	12	14	18	24	28	35
Hole diameter in fixture	d_f	[mm]	9	12	14	18	22	26	32
Min. hole depth in substrate	h_0	[mm]	$h_{nom} + 5$	$h_{nom} + 5$	$h_{nom} + 5$	$h_{nom} + 5$	$h_{nom} + 5$	$h_{nom} + 5$	$h_{nom} + 5$
Min. substrate thickness	h_{min}	[mm]	$h_{nom} + 30 \geq 100$	$h_{nom} + 30 \geq 100$	$h_{nom} + 30 \geq 100$	$h_{nom} + 2d_0$	$h_{nom} + 2d_0$	$h_{nom} + 2d_0$	$h_{nom} + 2d_0$
Installation torque	T_{inst}	[Nm]	10	20	40	80	120	160	200
Min. spacing	s_{min}	[mm]	40	40	40	40	50	50	60
Min. edge distance	c_{min}	[mm]	40	40	40	40	50	50	60
MINIMUM EMBEDMENT DEPTH									
Min. installation depth	$h_{nom,min}$	[mm]	60	60	70	80	90	96	120
MAXIMUM EMBEDMENT DEPTH									
Min. installation depth	$h_{nom, max}$	[mm]	160	200	240	320	400	480	600

Minimum working and curing time

Resin temperature	Concrete temperature	Curing time*	Working time
[°C]	[°C]	[min]	[min]
5	5	96 h	180
10	10	72 h	120
20	20	10 h	50
25	30	5 h	35
25	40	4 h	20

**For wet concrete the curing time must be doubled*

Mechanical properties

Size			M8	M10	M12	M16	M20	M24	M30
R-STUDS Metric Threaded Rods - Steel Class 5.8									
Nominal ultimate tensile strength - tension	f_{uk}	[N/mm²]	500	500	500	500	500	500	500
Nominal yield strength - tension	f_{yk}	[N/mm²]	400	400	400	400	400	400	400
Cross sectional area - tension	A_s	[mm²]	37	58	84	157	245	353	560
Elastic section modulus	W_{el}	[mm³]	31	62	109	278	541	935	1868
Characteristic bending resistance	$M^0_{Rk,s}$	[Nm]	19	37	65	166	324	561	1124
Design bending resistance	M	[Nm]	15	30	52	133	259	449	899
Allowable bending resistance	M_{rec}	[Nm]	11	21	37	95	185	321	642

Mechanical properties

Size			M8	M10	M12	M16	M20	M24	M30
R-STUDS Metric Threaded Rods - Steel Class 8.8									
Nominal ultimate tensile strength - tension	f_{uk}	[N/mm²]	800	800	800	800	800	800	800
Nominal yield strength - tension	f_{yk}	[N/mm²]	640	640	640	640	640	640	640
Cross sectional area - tension	A_s	[mm²]	37	58	84	157	245	353	560
Elastic section modulus	W_{el}	[mm³]	31	62	109	278	541	935	1868
Characteristic bending resistance	$M^0_{Rk,s}$	[Nm]	30	60	105	266	519	898	1799
Design bending resistance	M	[Nm]	24	48	84	213	416	718	1439
Allowable bending resistance	M_{rec}	[Nm]	17	34	60	152	297	513	1028
R-STUDS Metric Threaded Rods - Steel Class A4									
Nominal ultimate tensile strength - tension	f_{uk}	[N/mm²]	700	700	700	700	700	700	700
Nominal yield strength - tension	f_{yk}	[N/mm²]	450	450	450	450	450	450	450
Cross sectional area - tension	A_s	[mm²]	37	58	84	157	245	353	560
Elastic section modulus	W_{el}	[mm³]	31	62	109	278	541	935	1868
Characteristic bending resistance	$M^0_{Rk,s}$	[Nm]	26	52	92	233	454	786	1574
Design bending resistance	M	[Nm]	17	34	59	149	291	504	1009
Allowable bending resistance	M_{rec}	[Nm]	12	24	42	107	208	360	721

Basic performance data

R-STUDS

Performance data for single anchor without influence of edge distance and spacing

Size		M8	M10	M12	M16	M20	M24	M30	M8	M10	M12	M16	M20	M24	M30
Substrate		Non-cracked concrete							Cracked concrete						
MEAN ULTIMATE LOAD															
TENSION LOAD $N_{Ru,m}$															
R-STUDS METRIC THREADED RODS - STEEL CLASS 5.8															
Minimum embedment depth	[kN]	18.9	30.5	39.5	48.3	57.6	63.5	88.7	18.9	22.1	27.8	34.0	40.6	44.7	62.4
Maximum embedment depth	[kN]	18.9	30.5	44.1	81.9	128.1	184.8	294.0	18.9	30.5	44.1	81.9	128.1	184.8	294.0
R-STUDS METRIC THREADED RODS - STEEL CLASS 8.8															
Minimum embedment depth	[kN]	28.9	31.4	39.5	48.3	57.6	63.5	88.7	22.1	22.1	27.8	34.0	40.6	44.7	62.4
Maximum embedment depth	[kN]	30.5	48.3	70.4	132.3	205.8	296.1	471.1	30.5	48.3	70.4	132.3	205.8	296.1	471.5
R-STUDS METRIC THREADED RODS - STEEL CLASS A4															
Minimum embedment depth	[kN]	27.3	31.4	39.5	48.3	57.6	63.5	88.7	22.1	22.1	27.8	34.0	40.6	44.7	62.4
Maximum embedment depth	[kN]	27.3	43.1	62.0	115.5	179.6	259.4	412.7	27.3	43.1	62.0	115.5	179.6	259.4	412.7
SHEAR LOAD $V_{Ru,m}$															
R-STUDS METRIC THREADED RODS - STEEL CLASS 5.8															
Minimum embedment depth	[kN]	11.3	18.3	26.5	49.1	76.9	110.9	176.4	11.3	18.3	26.5	49.1	76.9	89.4	124.9
Maximum embedment depth	[kN]	11.3	18.3	26.5	49.1	76.9	110.9	176.4	11.3	18.3	26.5	49.1	76.9	110.9	176.4
R-STUDS METRIC THREADED RODS - STEEL CLASS 8.8															
Minimum embedment depth	[kN]	18.3	29.0	42.2	79.4	115.3	127.0	177.5	18.3	29.0	42.2	68.0	81.1	89.4	124.9
Maximum embedment depth	[kN]	18.3	29.0	42.2	79.4	123.5	177.7	282.9	18.3	29.0	42.2	79.4	123.5	177.7	282.9
R-STUDS METRIC THREADED RODS - STEEL CLASS A4															
Minimum embedment depth	[kN]	16.4	16.4	37.2	69.3	107.7	127.0	177.5	16.4	25.8	37.2	68.0	81.1	89.4	124.9
Maximum embedment depth	[kN]	16.4	16.4	37.2	69.3	107.7	155.6	247.6	16.4	25.8	37.2	69.3	107.7	155.6	247.6

Basic performance data

Size		M8	M10	M12	M16	M20	M24	M30	M8	M10	M12	M16	M20	M24	M30
CHARACTERISTIC LOAD															
TENSION LOAD N_{Rk}															
R-STUDS METRIC THREADED RODS - STEEL CLASS 5.8															
Minimum embedment depth	[kN]	18.0	22.9	28.8	35.2	42.0	46.3	64.7	11.3	14.1	19.8	24.6	29.4	32.4	45.3
Maximum embedment depth	[kN]	18.0	29.0	42.0	78.0	122.0	176.0	280.0	18.0	29.0	42.0	78.0	122.0	176.0	280.0
R-STUDS METRIC THREADED RODS - STEEL CLASS 8.8															
Minimum embedment depth	[kN]	22.9	22.9	28.8	35.2	42.0	46.3	64.7	11.3	14.1	19.8	24.6	29.4	32.4	45.3
Maximum embedment depth	[kN]	29.0	46.0	67.0	126.0	196.0	282.0	449.0	29.0	46.0	67.0	120.6	188.5	235.2	339.3
R-STUDS METRIC THREADED RODS - STEEL CLASS A4															
Minimum embedment depth	[kN]	22.9	22.9	28.8	35.2	42.0	46.3	64.7	11.3	14.1	19.8	24.6	29.4	32.4	45.3
Maximum embedment depth	[kN]	26.0	41.0	59.0	110.0	171.0	247.0	393.0	26.0	41.0	59.0	110.0	171.0	235.2	339.3
SHEAR LOAD V_{Rk}															
R-STUDS METRIC THREADED RODS - STEEL CLASS 5.8															
Minimum embedment depth	[kN]	9.00	14.0	21.0	39.0	61.0	88.0	129.3	9.00	14.0	21.0	39.0	58.8	64.8	90.5
Maximum embedment depth	[kN]	9.00	14.0	21.0	39.0	61.0	88.0	140.0	9.00	14.0	21.0	39.0	61.0	88.0	140.0
R-STUDS METRIC THREADED RODS - STEEL CLASS 8.8															
Minimum embedment depth	[kN]	15.0	23.0	34.0	63.0	84.0	92.5	129.3	15.0	23.0	34.0	49.3	58.8	64.8	90.5
Maximum embedment depth	[kN]	15.0	23.0	34.0	63.0	98.0	141.0	224.0	15.0	23.0	34.0	63.0	98.0	141.0	224.0
R-STUDS METRIC THREADED RODS - STEEL CLASS A4															
Minimum embedment depth	[kN]	13.0	20.0	29.0	55.0	84.0	92.5	129.3	13.0	20.0	29.0	49.3	58.8	64.8	90.5
Maximum embedment depth	[kN]	13.0	20.0	29.0	55.0	86.0	124.0	196.0	13.0	20.0	29.0	55.0	86.0	124.0	190.0
DESIGN LOAD															
TENSION LOAD N_{Rd}															
R-STUDS METRIC THREADED RODS - STEEL CLASS 5.8															
Minimum embedment depth	[kN]	12.0	15.2	19.2	23.5	28.0	30.9	43.1	7.54	9.42	13.2	16.4	19.6	21.6	30.2
Maximum embedment depth	[kN]	12.0	19.3	28.0	52.0	81.3	117.3	186.7	12.0	19.3	28.0	52.0	81.3	117.3	186.7
R-STUDS METRIC THREADED RODS - STEEL CLASS 8.8															
Minimum embedment depth	[kN]	15.2	15.2	19.2	23.5	28.0	30.9	43.1	7.54	9.42	13.2	16.4	19.6	21.6	30.2
Maximum embedment depth	[kN]	19.3	30.7	44.7	84.0	130.7	188.0	299.3	19.3	30.7	44.7	80.4	125.7	156.8	226.2
R-STUDS METRIC THREADED RODS - STEEL CLASS A4															
Minimum embedment depth	[kN]	13.9	15.2	19.2	23.5	28.0	30.9	43.1	7.54	9.42	13.2	16.4	19.6	21.6	30.2
Maximum embedment depth	[kN]	13.9	21.9	31.6	58.8	91.4	132.1	210.2	13.9	21.9	31.6	58.8	91.4	132.1	210.2
SHEAR LOAD V_{Rd}															
R-STUDS METRIC THREADED RODS - STEEL CLASS 5.8															
Minimum embedment depth	[kN]	7.20	11.2	16.8	31.2	48.8	61.7	86.2	7.20	11.2	16.8	31.2	39.2	43.2	60.4
Maximum embedment depth	[kN]	7.20	11.2	16.8	31.2	48.8	70.4	112.0	7.20	11.2	16.8	31.2	48.8	70.4	112.0
R-STUDS METRIC THREADED RODS - STEEL CLASS 8.8															
Minimum embedment depth	[kN]	12.0	18.4	27.2	46.9	56.0	61.7	86.2	12.0	18.4	26.4	32.9	39.2	43.2	60.4
Maximum embedment depth	[kN]	12.0	18.4	27.2	50.4	78.4	112.8	179.2	12.0	18.4	27.2	50.4	78.4	112.8	179.2
R-STUDS METRIC THREADED RODS - STEEL CLASS A4															
Minimum embedment depth	[kN]	8.33	12.8	18.6	35.3	55.1	61.7	86.2	8.33	12.8	18.6	32.9	39.2	43.2	60.4
Maximum embedment depth	[kN]	8.33	12.8	18.6	35.3	55.1	79.5	125.6	8.33	12.8	18.6	35.3	55.1	79.5	125.6

Basic performance data

Size		M8	M10	M12	M16	M20	M24	M30	M8	M10	M12	M16	M20	M24	M30
RECOMMENDED LOAD															
TENSION LOAD N_{rec}															
R-STUDS METRIC THREADED RODS - STEEL CLASS 5.8															
Minimum embedment depth	[kN]	8.57	10.9	13.7	16.8	20.0	22.0	30.8	5.39	6.73	9.42	11.7	14.0	15.4	21.6
Maximum embedment depth	[kN]	8.57	13.8	20.0	37.1	58.1	83.8	133.3	8.57	13.8	20.0	37.1	58.1	83.8	133.3
R-STUDS METRIC THREADED RODS - STEEL CLASS 8.8															
Minimum embedment depth	[kN]	10.9	10.9	13.7	16.8	20.0	22.0	30.8	5.39	6.73	9.42	11.7	14.0	15.4	21.6
Maximum embedment depth	[kN]	13.8	21.9	31.9	60.0	93.3	134.3	213.8	13.8	21.9	31.9	57.5	89.8	112.0	161.6
R-STUDS METRIC THREADED RODS - STEEL CLASS A4															
Minimum embedment depth	[kN]	9.93	10.9	13.7	16.8	20.0	22.0	30.8	5.39	6.73	9.42	11.7	14.0	15.4	21.6
Maximum embedment depth	[kN]	9.93	15.7	22.5	42.0	65.3	94.4	150.1	9.93	15.7	22.5	42.0	65.3	94.4	150.1
SHEAR LOAD V_{rec}															
R-STUDS METRIC THREADED RODS - STEEL CLASS 5.8															
Minimum embedment depth	[kN]	5.14	8.00	12.0	22.3	34.9	44.1	61.6	5.14	8.00	12.0	22.3	28.0	30.9	43.1
Maximum embedment depth	[kN]	5.14	8.00	12.0	22.3	34.9	50.3	80.0	5.14	8.00	12.0	22.3	34.9	50.3	80.0
R-STUDS METRIC THREADED RODS - STEEL CLASS 8.8															
Minimum embedment depth	[kN]	8.57	13.1	19.4	33.5	40.0	44.1	61.6	8.57	13.1	18.9	23.5	28.0	30.9	43.1
Maximum embedment depth	[kN]	8.57	13.1	19.4	36.0	56.0	80.6	128.0	8.57	13.1	19.4	36.0	56.0	80.6	128.0
R-STUDS METRIC THREADED RODS - STEEL CLASS A4															
Minimum embedment depth	[kN]	5.95	9.16	13.3	25.2	39.4	44.1	61.6	5.95	9.16	13.3	23.5	28.0	30.9	43.1
Maximum embedment depth	[kN]	5.95	9.16	13.3	25.2	39.4	56.8	89.7	5.95	9.16	13.3	25.2	39.4	56.8	89.7

Design performance data

R-STUDS

Size			M8	M10	M12	M16	M20	M24	M30
TENSION LOAD									
STEEL FAILURE; STEEL CLASS 5.8									
Characteristic resistance	$N_{Rk,s}$	[kN]	18.00	29.00	42.00	78.00	122.00	176.00	280.00
Partial safety factor	γ_{Ms}	-	1.50	1.50	1.50	1.50	1.50	1.50	1.50
STEEL FAILURE; STEEL CLASS 8.8									
Characteristic resistance	$N_{Rk,s}$	[kN]	29.00	46.00	67.00	126.00	196.00	282.00	448.00
Partial safety factor	γ_{Ms}	-	1.50	1.50	1.50	1.50	1.50	1.50	1.50
STEEL FAILURE; STEEL GRADE A4-70									
Characteristic resistance	$N_{Rk,s}$	[kN]	26.00	41.00	59.00	110.00	171.00	247.00	392.00
Partial safety factor	γ_{Ms}	-	1.87	1.87	1.87	1.87	1.87	1.87	1.87
COMBINED PULL-OUT AND CONCRETE CONE FAILURE; NON-CRACKED CONCRETE, C20/25 (40°C/24°C)									
Characteristic bond resistance	T_{Rk}	[N/mm²]	16.00	15.00	16.00	13.00	12.00	12.00	10.00
Sustained load factor	ψ^0_{sus}	-	0.60	0.60	0.60	0.60	0.60	0.60	0.60
COMBINED PULL-OUT AND CONCRETE CONE FAILURE; NON-CRACKED CONCRETE, C20/25 (80°C/50°C)									
Characteristic bond resistance	T_{Rk}	[N/mm²]	16.00	15.00	16.00	13.00	12.00	12.00	10.00
Sustained load factor	ψ^0_{sus}	-	0.60	0.60	0.60	0.60	0.60	0.60	0.60
COMBINED PULL-OUT AND CONCRETE CONE FAILURE; CRACKED CONCRETE, C20/25 (40°C/24°C)									
Characteristic bond resistance	T_{Rk}	[N/mm²]	7.50	7.50	7.50	7.50	7.50	6.50	6.00
Sustained load factor	ψ^0_{sus}	-	0.60	0.60	0.60	0.60	0.60	0.60	0.60
COMBINED PULL-OUT AND CONCRETE CONE FAILURE; CRACKED CONCRETE, C20/25 (80°C/50°C)									
Characteristic bond resistance	T_{Rk}	[N/mm²]	7.50	7.50	7.50	7.50	7.50	6.50	6.00
Sustained load factor	ψ^0_{sus}	-	0.60	0.60	0.60	0.60	0.60	0.60	0.60
COMBINED PULL-OUT AND CONCRETE CONE FAILURE									
Installation safety factor	γ_{inst}	-	1.00	1.00	1.00	1.00	1.00	1.00	1.00
Increasing factors for $N_{Rd,p}$ - C30/37	ψ_c	-	1.00	1.00	1.00	1.00	1.04	1.04	1.04
Increasing factors for $N_{Rd,p}$ - C40/50	ψ_c	-	1.00	1.00	1.00	1.00	1.07	1.07	1.07
Increasing factors for $N_{Rd,p}$ - C50/60	ψ_c	-	1.00	1.00	1.00	1.00	1.09	1.09	1.09
CONCRETE CONE FAILURE									
Installation safety factor	γ_{inst}	-	1.00	1.00	1.00	1.00	1.00	1.00	1.00
Factor for cracked concrete	$k_{cr,N}$	-	7.70	7.70	7.70	7.70	7.70	7.70	7.70
Factor for non-cracked concrete	$k_{ucr,N}$	-	11.00	11.00	11.00	11.00	11.00	11.00	11.00
Edge distance	$c_{cr,N}$	[mm]	$1.5*h_{ef}$	$1.5*h_{ef}$	$1.5*h_{ef}$	$1.5*h_{ef}$	$1.5*h_{ef}$	$1.5*h_{ef}$	$1.5*h_{ef}$
Spacing	$s_{cr,N}$	[mm]	$3.0*h_{ef}$	$3.0*h_{ef}$	$3.0*h_{ef}$	$3.0*h_{ef}$	$3.0*h_{ef}$	$3.0*h_{ef}$	$3.0*h_{ef}$
CONCRETE SPLITTING FAILURE									
Installation safety factor	γ_{inst}	-	1.00	1.00	1.00	1.00	1.00	1.00	1.00

Design performance data

Size			M8	M10	M12	M16	M20	M24	M30
SHEAR LOAD									
STEEL FAILURE; STEEL CLASS 5.8									
Characteristic resistance without lever arm	$V_{Rk,s}$	[kN]	9.00	14.00	21.00	39.00	61.00	88.00	140.00
Ductility factor	k_7	-	0.80	0.80	0.80	0.80	0.80	0.80	0.80
Characteristic resistance with lever arm	$M_{Rk,s}$	[Nm]	19.00	37.00	65.00	166.00	324.00	561.00	1124.00
Partial safety factor	γ_{Ms}	-	1.25	1.25	1.25	1.25	1.25	1.25	1.25
STEEL FAILURE; STEEL CLASS 8.8									
Characteristic resistance without lever arm	$V_{Rk,s}$	[kN]	15.00	23.00	34.00	63.00	98.00	141.00	224.00
Ductility factor	k_7	-	0.80	0.80	0.80	0.80	0.80	0.80	0.80
Characteristic resistance with lever arm	$M_{Rk,s}$	[Nm]	30.00	60.00	105.00	266.00	519.00	898.00	1799.00
Partial safety factor	γ_{Ms}	-	1.25	1.25	1.25	1.25	1.25	1.25	1.25
STEEL FAILURE; STEEL GRADE A4-70									
Characteristic resistance without lever arm	$V_{Rk,s}$	[kN]	13.00	20.00	29.00	55.00	86.00	124.00	196.00
Ductility factor	k_7	-	0.80	0.80	0.80	0.80	0.80	0.80	0.80
Characteristic resistance with lever arm	$M_{Rk,s}$	[Nm]	26.00	52.00	92.00	233.00	454.00	786.00	1574.00
Partial safety factor	γ_{Ms}	-	1.56	1.56	1.56	1.56	1.56	1.56	1.56
CONCRETE PRY-OUT FAILURE									
Factor	k	-	2.00	2.00	2.00	2.00	2.00	2.00	2.00
Installation safety factor	γ_{inst}	-	1.00	1.00	1.00	1.00	1.00	1.00	1.00
CONCRETE EDGE FAILURE									
Anchor diameter	d_{nom}	[mm]	8.00	10.00	12.00	16.00	20.00	24.00	30.00
Effective length of anchor	ℓ_f	[mm]	min(300; h_{ef};12d_{nom})	min(300; h_{ef};12d_{nom})	min(300; h_{ef};12d_{nom})	min(300; h_{ef};12d_{nom})	min(300; h_{ef};12d_{nom})	min(300; h_{ef};12d_{nom})	min(300; h_{ef};12d_{nom})
Installation safety factor	γ_{inst}	-	1.00	1.00	1.00	1.00	1.00	1.00	1.00

Combined pull-out and concrete cone failure (EN 1992-4:2018, p.7.2.1.6., 7.14 - $N^0_{Rk,p}=\psi^0_{sus}*\tau_{Rk}*\pi*d*h_{ef}$).
$h_{ef} = h_{nom}$

Product commercial data

Product Code	Volume [ml]	Quantity [pcs]			Weight [kg]			Bar Codes
		Box	Outer	Pallet	Box	Outer	Pallet	
R-KEX-I-600 [1)]	600	8	8	504	8.0	8.0	536.0	5906675452562

1) ETA-18/0994