R-TFIX-TOOL-RED Setting tool

TX40 Setting tool with integrated disc for surface installation of screw-in fixing R-TFIX-8S

Product information

Features and benefits

- Integrated disc facilitates optimum R-TFIX-8S surface installation, setting the flange flush with the surface of the insulation
- Ideal design of TX40 bit perfect suited to the screw-in R-TFIX-8S allows easy and stable installation
- User-friendly - enables fast and easy installation
- Torx-40 bit type

Applications

- Polystyrene (EPS) boards
- Polyurethane (PU) boards
- Mineral wool (MW) boards
- Light wood wool building boards

Installation guide

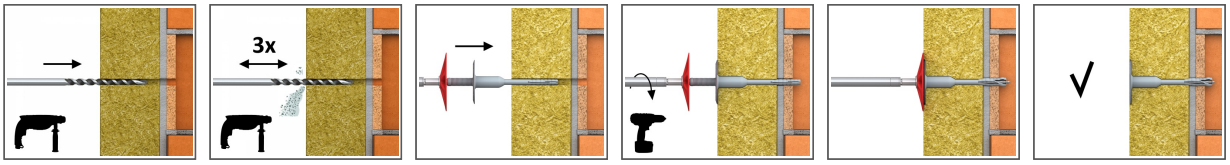

1. Drill a hole of required diameter and depth
2. Drilling depth of min 35mm in A,B,C,D materials and 75mm in Aerated Concrete Block.
3. Clean drilled hole 3 times.
4. Insert driver bit into recess in head moulding of R-TFIX-8S screw.
5. Insert the fixing into the drilled hole.
6. After inserting the fixing in the hole, the plate should be pressed against the thermal insulation surface.
7. Embedment depth of min 25mm in A,B,C,D materials and 65mm in Aerated Concrete Block.
8. Apply steady axial pressure, ensuring the disc of the setting tool is kept perpendicular to the fixing axis.
9. Steadily drive in the screw with high revs until fixing is secure (when disc touches insulation surface).

Product information

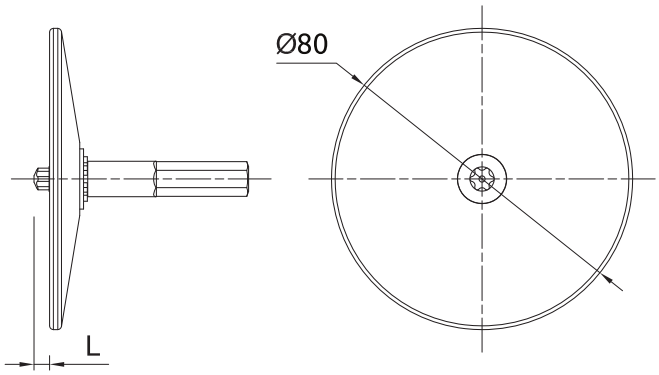

Product Code	Bite type	Diameter	Length
		d	L
		[mm]	
R-TFIX-TOOL-RED	T40	80	8

Product commercial data

Size	Product Code	Diameter [mm]	Length [mm]	Fixing			Quantity [pcs]			Weight [kg]			Bar Codes
				Diameter [mm]	Plate diameter [mm]	Length [mm]	Box	Outer	Pallet	Box	Outer	Pallet	
	R-TFIX-TOOL-RED	80	8				1	16	384	0.08	1.30	61.1	5906675412245
Ø08	R-TFIX-8S-115			8	60	115	200	200	8000	5.7	5.7	258.4	5906675417479
	R-TFIX-8S-135			8	60	135	200	200	8000	6.4	6.4	285.9	5906675417486
	R-TFIX-8S-155			8	60	155	200	200	6400	7.1	7.1	257.7	5906675417493
	R-TFIX-8S-175			8	60	175	200	200	6400	7.8	7.8	278.8	5906675417509
	R-TFIX-8S-195			8	60	195	200	200	6400	8.5	8.5	300.8	5906675417516
	R-TFIX-8S-215			8	60	215	100	100	4000	4.8	4.8	222.2	5906675417530
	R-TFIX-8S-235			8	60	235	100	100	4000	5.0	5.0	231.5	5906675417547
	R-TFIX-8S-255			8	60	255	100	100	4000	5.5	5.5	249.8	5906675417554
	R-TFIX-8S-275			8	60	275	100	100	4000	5.8	5.8	263.2	5906675417561
	R-TFIX-8S-295			8	60	295	100	100	4000	6.1	6.1	272.1	5906675417578
	R-TFIX-8S-315			8	60	315	100	100	4000	6.3	6.3	281.6	5906675498935
Ø08	R-TFIX-8S-335			8	60	335	100	100	4000	6.7	6.7	297.9	5906675417585
	R-TFIX-8S-355			8	60	355	100	100	3200	7.3	7.3	264.9	5906675417592
	R-TFIX-8S-375			8	60	375	100	100	3200	7.6	7.6	274.4	5906675417608
	R-TFIX-8S-395			8	60	395	50	50	1600	4.2	4.2	164.9	5906675417615
	R-TFIX-8S-415			8	60	415	50	50	1600	4.4	4.4	171.5	5906675417639
	R-TFIX-8S-435			8	60	435	50	50	1600	4.5	4.5	174.7	5906675417646
	R-TFIX-8S-455			8	60	455	50	50	1600	4.8	4.8	183.8	5906675417653